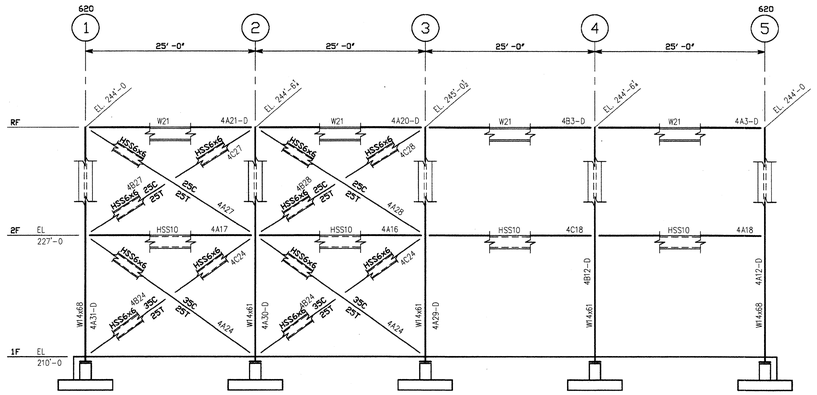

ELEVATION AT COLUMN LINE A
VIEW LOOKING SOUTH

SEQ 4

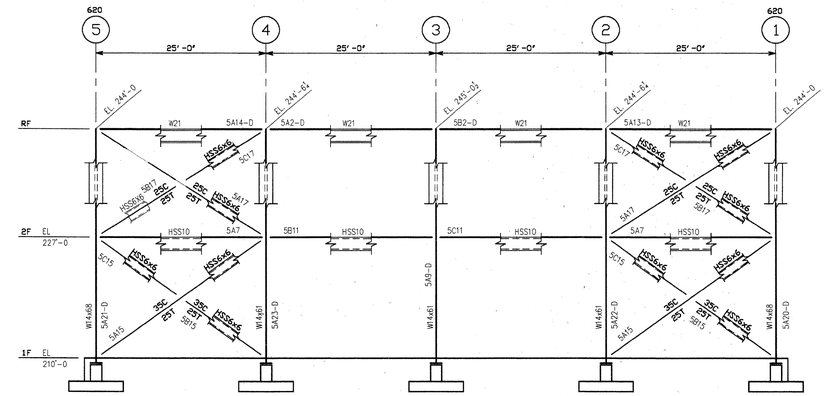

ELEVATION AT COLUMN LINE F
VIEW LOOKING NORTH

SEQ 5

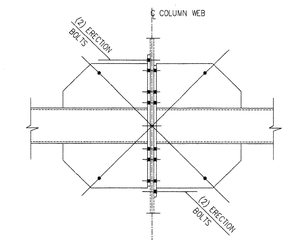

BEAMS TO COLUMN WEB CONNECTION
(LOOKING WEST OR NORTH)

ERECTOR NOTE!
WHEN TUBE BEAMS, OR BRACED BEAMS, ON BOTH SIDES OF A COLUMN WEB HAVE IDENTICAL CONNECTIONS, ONE MORE ROW OF BOLTS GOING "UP" ON THE WEST OR SOUTH BEAM, AND ONE MORE ROW GOING "DOWN" ON THE EAST OR NORTH BEAM, HAVE BEEN ADDED FOR ERECTION. WHEN THIS CONDITION OCCURS AT THE ROOF, ONE ROW HAS BEEN ADDED ON THE EAST OR NORTH BEAM. WHEN THIS CONDITION OCCURS AT UNBRACED WIDE FLANGE BEAMS USE AN ERECTION SEAT ANGLE PER DETAIL "F" ON DWG. NO. "X3".

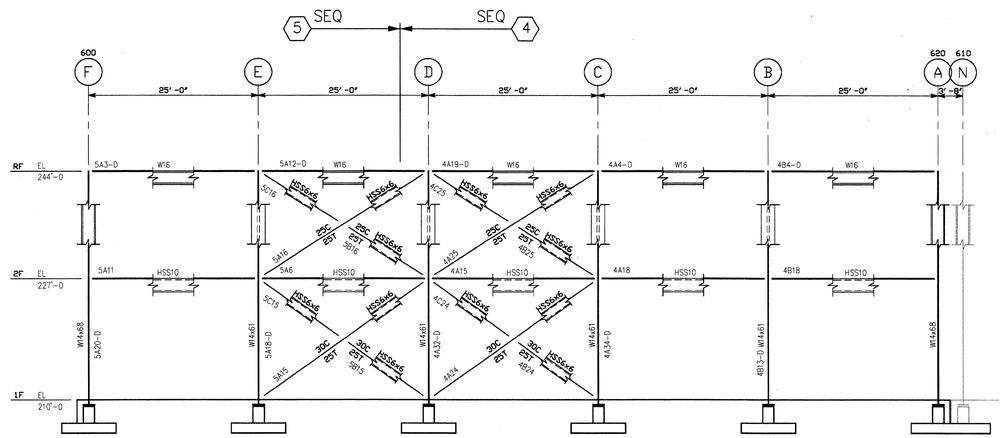

ELEVATION AT COLUMN LINE 1
VIEW LOOKING WEST

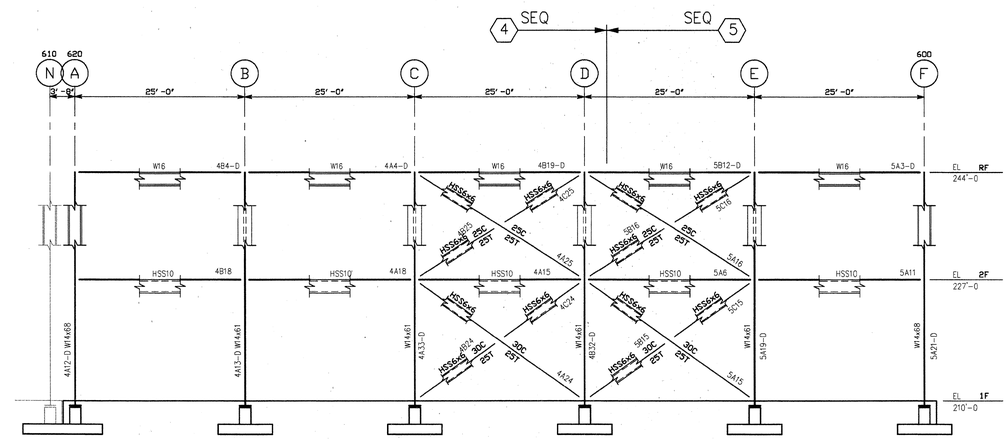

ELEVATION AT COLUMN LINE 5
VIEW LOOKING EAST

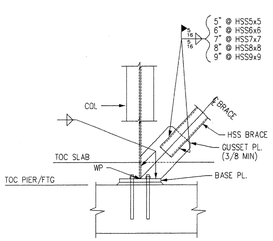

BRACE – COL WEB – BASE PL

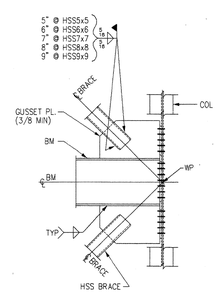

BRACE – BEAM – COL WEB

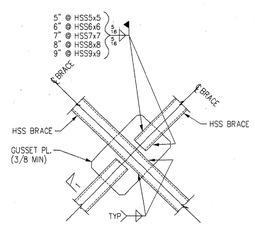

BRACE – BRACE

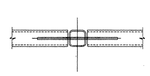

SECTION 1

FIELD WARNING:
LIFT HOLE IS FOR SINGLE PIECE DEAD LOAD LIFT AND NOT TO BE USED FOR LIFTING MULTI-PIECE ASSEMBLY. LIFTING OF MULTI-PIECE ASSEMBLIES SHALL BE THE RESPONSIBILITY OF THE ERECTOR AND ALL LIFTING DEVICES AND LIFTING LOCATIONS SHALL BE DESIGNED BY THE ERECTOR.

NOTES
1. MEMBER LEGEND:
HSS6x6 = HSS6x6x5/16
2. SHOP PAINT (AP) UNO

ERECTION DRAWING
ERECT MEMBER WITH PIECE MARK TO END AS SHOWN

REV. NO.	DATE	REVISION DESCRIPTION	BY / CHK	APP'L	SHOP	FIELD
0						

REV. NO.	DATE	REVISION DESCRIPTION	BY / CHK	APP'L	SHOP	FIELD
0	JAN 09 2004					

DESIGN DWG REF: PWC620-S1-001-501 (0)
DRAWN MEI/JF DATE 11/03 CHKD DATE
STRUCTURE UNSTABLE UNTIL FIELD WORK COMPLETE. ERECTOR GUY AS REQUIRED.
UNO, PAINT PIECE MARK TO READ RIGHT SIDE UP ON LEFT END OF PIECE. ERECT WITH MARK AT SAME END AS SHOWN ON ERECTION PLAN & RIGHT SIDE UP.

AFCO STEEL
1423 EAST SIXTH STREET / POST OFFICE BOX 231 / AREA CODE 501-340-6200 / LITTLE ROCK, ARKANSAS 72203

CUSTOMER	SUITT CONSTRUCTION	DRAWING NO.	E620-501
JOB TITLE	LILLY PWC		
STRUCTURE	BUILDING NO. 620		
LOCATION	MANASSES, VA.	CONTRACT NO.	3227
ARCH. OR ENGR.	JACOBS ENGINEER		